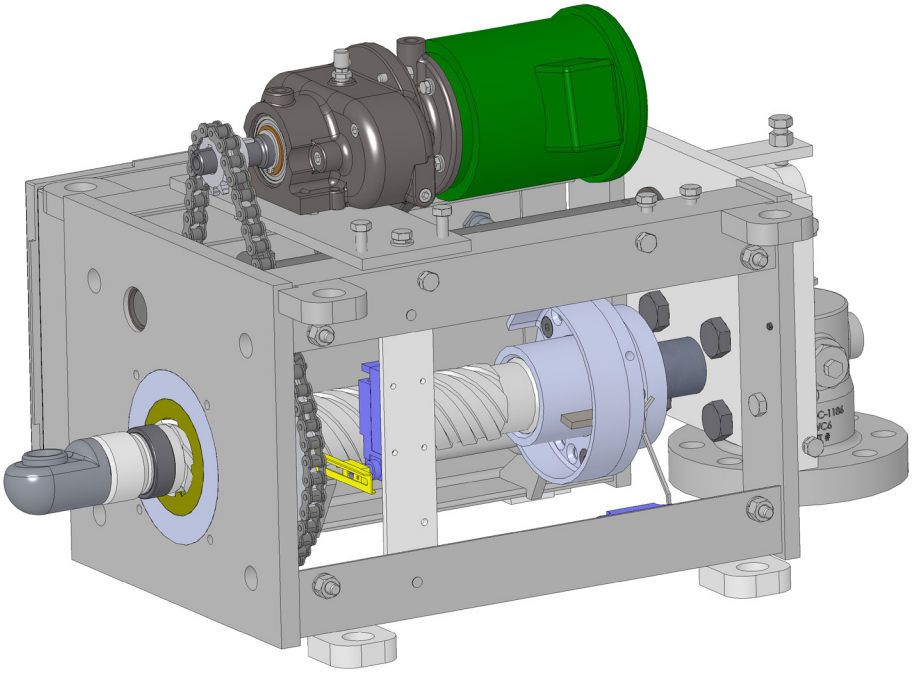

VS-H WALLBLOWER

Severe Duty Wall Furnace Cleaner

The compact and reliable Clyde Bergemann VS-H furnace wallblower is a single motor screw-drive cleaner offering **significant advantages** over other cleaners in the industry.

It's modular construction and fewer moving parts make this device more maintenance friendly than the competitor's wallblowers. If maintenance is required, the enclosures of the VS-H can be removed quickly for easy access to the poppet valve, limit switches, screw tube and feedtube. This allows maintenance without removing the entire cleaner, as is required with competitor or "gooseneck" style cleaners. Furthermore, the single gearbox drive provides the same cleaning performance without the frequent tag outs that can plague multiple gearbox units.

Simple Precise External Adjustment Features

Inherent in the severe-duty VS-H wallblower's design is the external adjustment feature, which allows simple and precise alignment of the nozzle, relative to the waterwall tubes. Unlike other style wallblowers, which require mechanical deformation of the sleeve-tube, the VS-H utilizes four easily accessible adjustment bolts, eliminating tube leaks caused by misaligned wallblowers. The standard VS-H is designed for balanced draft or negative pressure boilers.

Similar Advantages as Found in Longer Convection Cleaners

The retractable style of the VS-H incorporates many of the advantages found in longer convection cleaners, such as external limit switches instead of failure-prone complex timing gears. The mounting flange adapts to most existing wall blower designs, which makes replacement easy

Drive Mechanism Benefits

The drive mechanism is also unique. Instead of problematic drive pins, the VS-H incorporates a full engagement drive nut. In addition to avoiding the drive pins' chronic failures, the drive nut eliminates the problematic ball-type bearing used on competitor style wallblowers, which must be frequently replaced.

CLYDE BERGEMANN

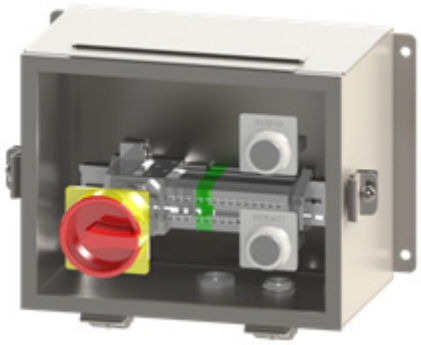

VS-H WALLBLOWER
Severe Duty Wall Furnace Cleaner

Maintenance Friendly Features

Similar to the retractable RS-H sootblower which is used in convection pass cleaning, the VS-H's removable poppet valve is supplied with an externally adjustable seat and pressure disc, which allows precise, on-line setting of blowing pressures. Each VS-H retractable is supplied with an Integral SST NEMA 4X terminal strip junction box, complete with insert and retract push buttons and a rotary disconnect switch.

The model VS-H retractable offers the option of an integral SST NEMA 4X motor control center, complete with reversing contactor, insert and retract pushbuttons, and rotary disconnect switch. Regardless of control box configuration, the enclosure is located on the right side of the unit. Remote mounted configuration is available as an option.

Benefits

- Easier maintenance through modular design
- Single motor design
- Externally adjustable poppet valve
- Easy access to poppet valve, screw tube, and feed tube
- Drive nut design eliminates drive pins and ball bearings
- Adjustable wallbox mounting without modification
- Easy adjustable blowing pressure
- Two externally mounted limit switches

CLYDE BERGEMANN

Clyde Bergemann Power Group Americas Inc.

4015 Presidential Parkway
Atlanta, GA 30340

1 800-241-5996
T: 770-557-3600
F: 770-557-3651

COMPANY WITH QUALITY SYSTEM CERTIFIED BY DNV GL = ISO 9001 =

Internet: www.cbpg.com
eMail: info@us.cbpg.com

CB-2018/08. We reserve the right to make technical changes without notice.